宇华国际科技有限公司

YuHua INT,L Technology Co., LIMITED

SPECIFICATION FOR LCD MODULE

Customer : _____

Product Model: YH035RMQ5401

Sample code: _____

Designed by	Checked by	Approved by

Final Approval by Customer

☐ **LCM Machinery OK** Checked By _____ ☐ **LCM Display OK** Checked By _____	☐ **LCM OK** ☐ **NG，Problem survey:** Approved By _____

※The specification of "TBD" should refer to the measured value of sample . If there is difference between the design specification and measured value, we naturally shall negotiate and agree to solution with customer.

CONTENTS

No.	ITEM	PAGE
0	RECORD OF REVISION	3
1	SUMMARY	4
2	FEATURES	4
3	GENERAL SPECIFICATIONS	4
4	ABSOLUTE MAXIMUM RATINGS	4
5	ELECTRICAL CHARACTERISTICS	5
6	DC CHARATERISTICS	6
7	AC CHARACTERISTICS	6~14
8	OPTICAL CHARATERISTIC	15~17
9	TOUCH PANEL	18~19
10	INTERFACE	20~24
11	BLOCK DIAGRAM	25
12	QUALITY ASSURANCE	26
13	OUTLINE DRAWING	27
14	PACKAGE INFORMATION	28
15	PRECAUTIONS	29~30

RECORD OF REVISIONS

Revision	Date	Page	Description
A	2013/01/25	all	New Creation

1. SUMMARY

This technical specification applies to 3.45“color TFT-LCD panel. The 3.45“ color TFT-LCD panel is designed for GPS, camcorder, digital camera application and other electronic products which require high quality flat panel displays.
This module follows RoHS.

2. FEATURES

High Resolution: 230,400 Dots (320 RGB x 240). YH035MQ54-00 is a transmissive type color active matrix liquid crystal display (LCD) which uses amorphous thin film transistor (TFT) as switching devices. This product is composed of a TFT LCD panel, driver ICs, FPC, backlight unit and touch panel.
,

3. GENERAL SPECIFICATIONS

Parameter		Specifications	Unit
Screen size		3.45(Diagonal)	Inch
Display Format		320 RGB x 240	Dot
Active area		70.08(H) x 52.56(V)	mm
Dot size		73x 219	um
Pixel Configuration		RGB-Stripe	
Outline dimension		76.9(W) x 63.9(H) x 4.36(D)	mm
Display Mode		Normally white/Transmissive	
Surface Treatment		Haze 20%	
Display Garmut		NTSC 60%	
Input Interface		Digital 24-bit RGB/SERIAL RGB/CCIR656/CCIR601	
Weight		(40)	g
View Angle direction		6 o’clock	
Temperature Range	Operation	-20~70	℃
	Storage	-30~80	℃

4. ABSOLUTE MAXIMUM RATINGS

Item	Symbol	Condition	Min.	Max.	Unit	Remark
Power Voltage	DVDD,AVDD	GND=0	-0.3	5.0	V	
Input Signal Voltage	V_{in}	GND=0	-0.3	VDD+0.3	V	NOTE
Logic Output Voltage	V_{OUT}	GND=0	-0.3	VDD+0.3	V	NOTE

Note: Device is subject to be damaged permanently if stresses beyond those absolute maximum ratings listed above

1. Temp. ≤ 60℃, 90% RH MAX.
   Temp. ＞ 60℃, Absolute humidity shall be less than 90% RH at 60℃
2.

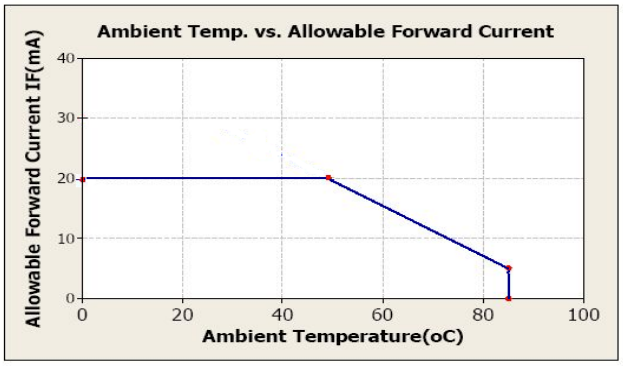

5. ELECTRICAL CHARACTERISTICS

5.1. Operating conditions:

Parameter	Symbol	Rating			Unit	Condition
		Min.	Typ.	Max.		
Power Voltage	VCC	3.0	3.3	3.6	V	
Digital Operation Current	Icc	-	8.6	-	mA	
Gate On Power	VGH	-	13.9	-	V	
Gate Off Power	VGL	-	13.6	-	V	
Vcom High Voltage	VcomH	-	3.9	-	V	Note1
Vcom low Voltage	VcomL	-	-1.2	-	V	Note1
Vcom level max	VcomA	-	-	6	V	

Note1. VcomH& VcomL：Adjust the color with gamma data. Vp-p should be higher then 4V.(Option 5V)

Note: Please power on following the sequence VCC → VDD

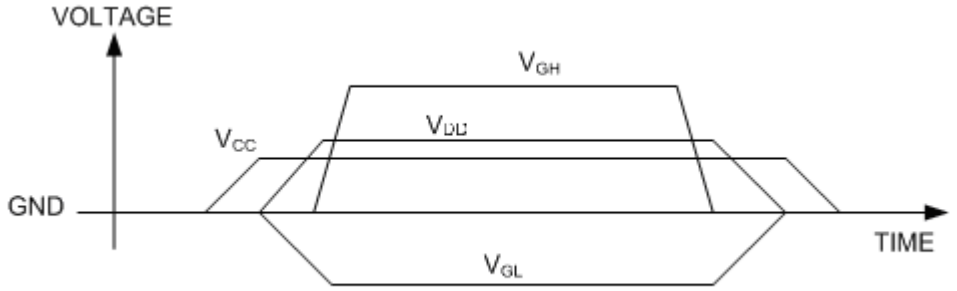

5.2 LED driving conditions

Parameter	Symbol	Min.	Typ.	Max.	Unit	Remark
LED current		-	20	-	mA	
Power Consumption		-	400	420	mW	
LED voltage	VBL+	18.6	19.8	21	V	Note 1
LED Life Time	-	10,000	-	-	Hr	Note 2,3

Note 1 : There are 1 Groups LED

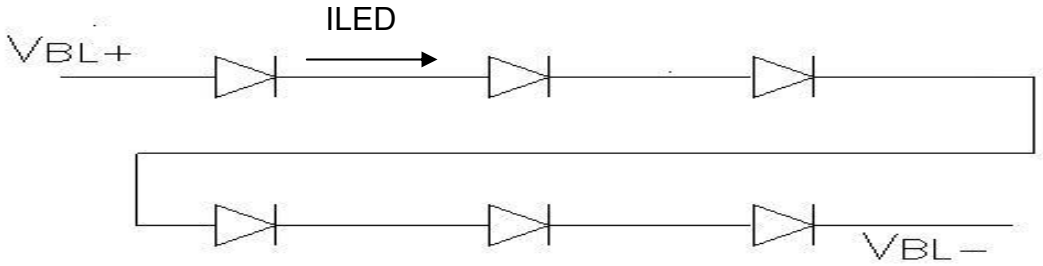

Note 2 : Ta = 25℃

Note 3 : Brightess to be decreased to 50% of the initial value

6. DC CHARATERISTICS

Parameter	Symbol	Rating			Unit	Condition
		Min.	Typ.	Max.		
Low level input voltage	V_{IL}	0	-	0.3 VCC	V	
Hight level input voltage	V_{IH}	0.7 VCC	-	VCC	V	

7. AC CHARATERISTICS

Digital Parallal RGB interface

Signal	Item	Symbol	Min	Typ	Max	Unit
Dclk	Frequency	Tosc	-	156	-	ns
	High Time	Tch	-	78	-	ns
	Low Time	Tcl	-	78	-	ns
Data	Setup Time	Tsu	12	-	-	ns
	Hold Time	Thd	12	-	-	ns
Hsync	Period	TH	-	408	-	Tosc
	Pulse Width	THS	5	30	-	Tosc
	Back-Porch	Thb		38		Tosc
	Display Period	TEP	-	320	-	Tosc
	Hsync-den time	THE	36	68	88	Tsoc
	Front-Porch	Thf	-	20	-	Tosc
Vsync	Period	Tv	-	262	-	TH
	Pulse Width	Tvs	1	3	5	TH
	Back-Porch	Tvb	-	15	-	TH
	Display Period	Tvd	-	240	-	TH
	Front-Porch	Tvf	2	4	-	TH

Note: 1. Thp + Thb = 68, the user is make up by yourself.
2. Tv = Tvs + Tvb + Tvd + Tvf , the user is make up by yourself.
3.When SYNC mode is used,1st data start from 68th Dclk after Hsync falling

Digital Serial RGB interface

Signal	Item	Symbol	Min	Typ	Max	Unit
Dclk	Frequency	Tosc	-	52	-	ns
	High Time	Tch	-	78	-	ns
	Low Time	Tcl	-	78	-	ns
Data	Setup Time	Tsu	12	-	-	ns
	Hold Time	Thd	12	-	-	ns
Hsync	Period	TH	-	1224	-	Tosc
	Pulse Width	THS	5	90	-	Tosc
	Back-Porch	Thb		114		Tosc
	Display Period	TEP	-	960	-	Tosc
	Hsync-den time	THE	108	204	264	
	Front-Porch	Thf	-	60	-	Tosc
Vsync	Period	Tv	-	262	-	TH
	Pulse Width	Tvs	1	3	5	TH
	Back-Porch	Tvb	-	15	-	TH
	Display Period	Tvd	-	240	-	TH
	Front-Porch	Tvf	2	4	-	TH

Note: 1. Thp + Thb = 204, the user is make up by yourself.
2. Tv = Tvs + Tvb + Tvd + Tvf , the user is make up by yourself.
3. When SYNC mode is used,1st data start from 204th Dclk after Hsync falling

CCIR601/656 Interface

Signal	Item	Symbol	Min	Typ	Max	Unit
Dclk	Frequency	Tosc	-	37	-	ns
	High Time	Tch	-	78	-	ns
	Low Time	Tcl	-	78	-	ns
Data	Setup Time	Tsu	12	-	-	ns
	Hold Time	Thd	12	-	-	ns

7.1 Waveform

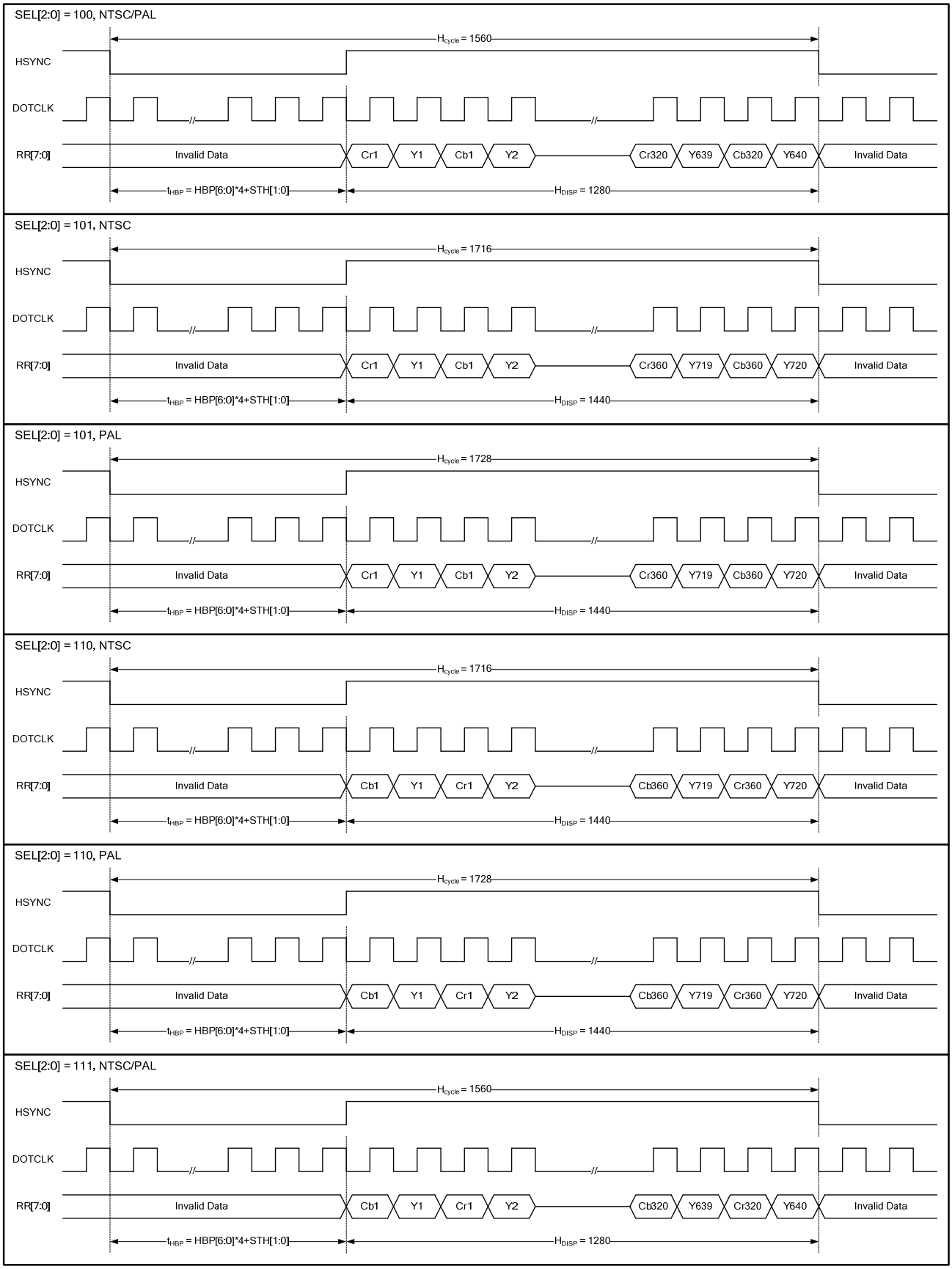

Figure1 CCIR601 Horizontal Timing

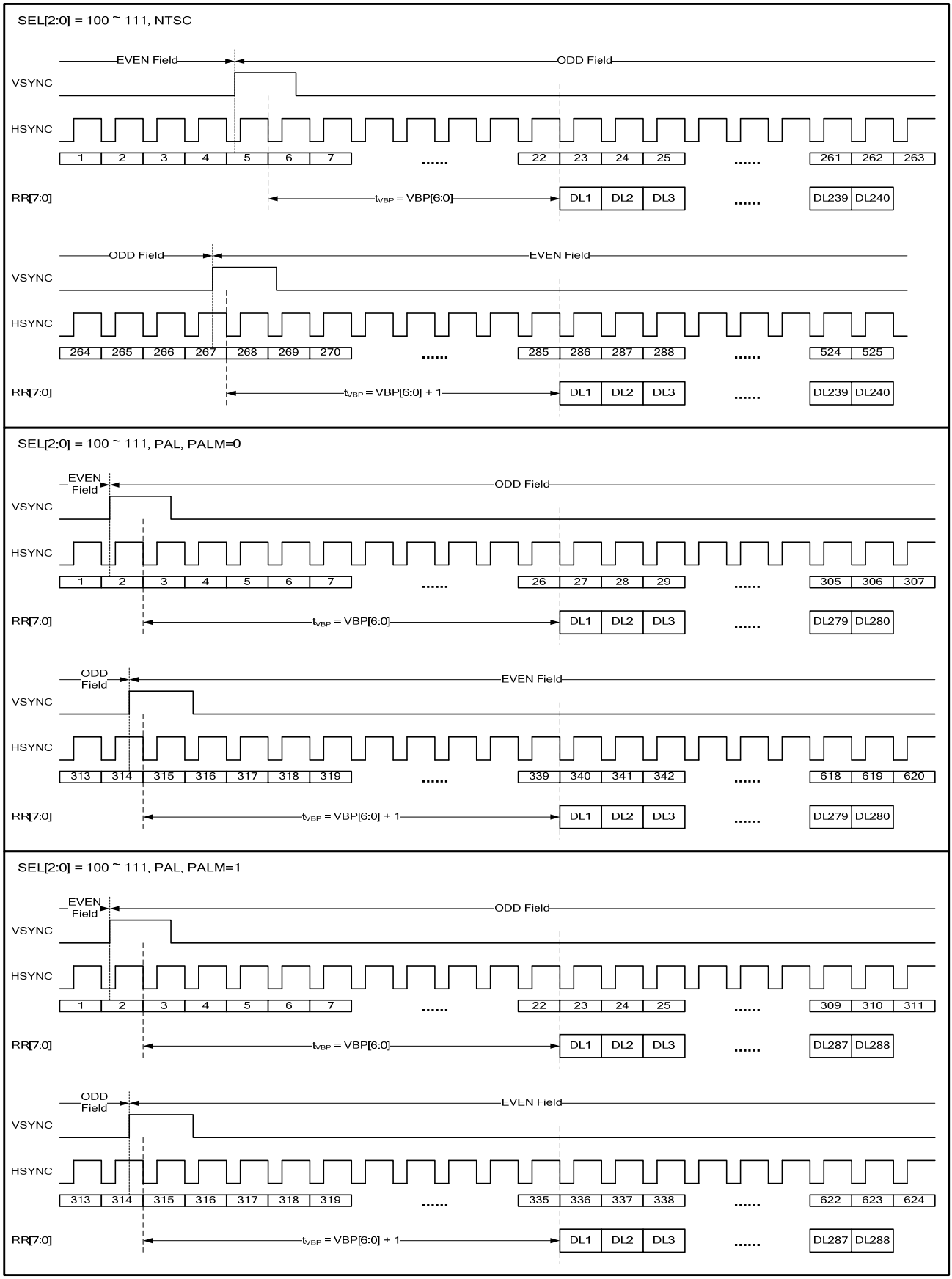

Figure1 CCIR601 Vertical Timing

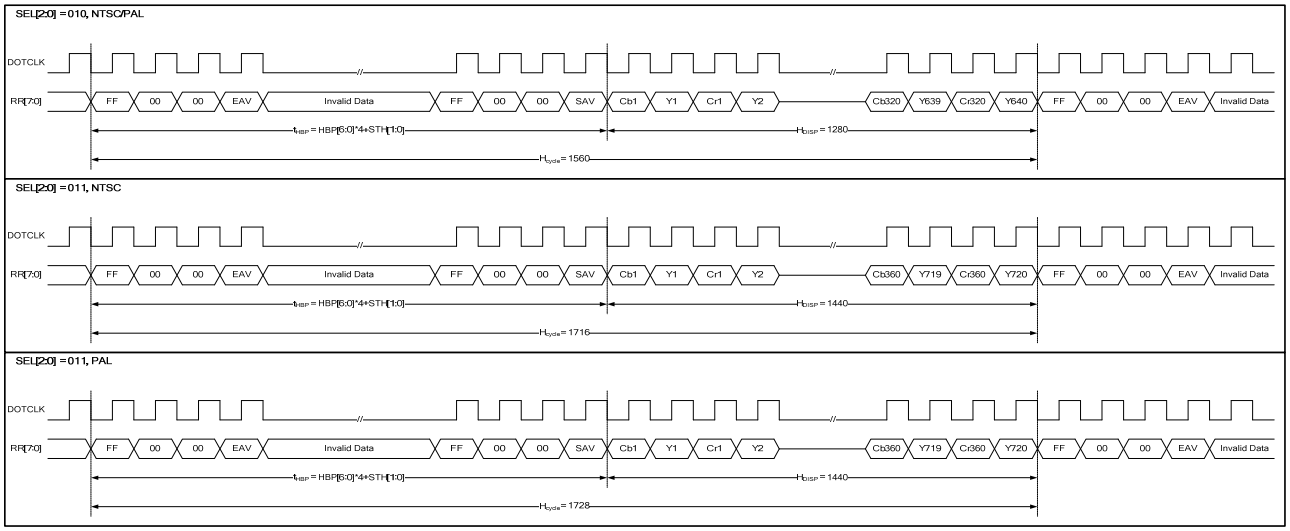

Figure2 CCIR656 Horizontal Timing

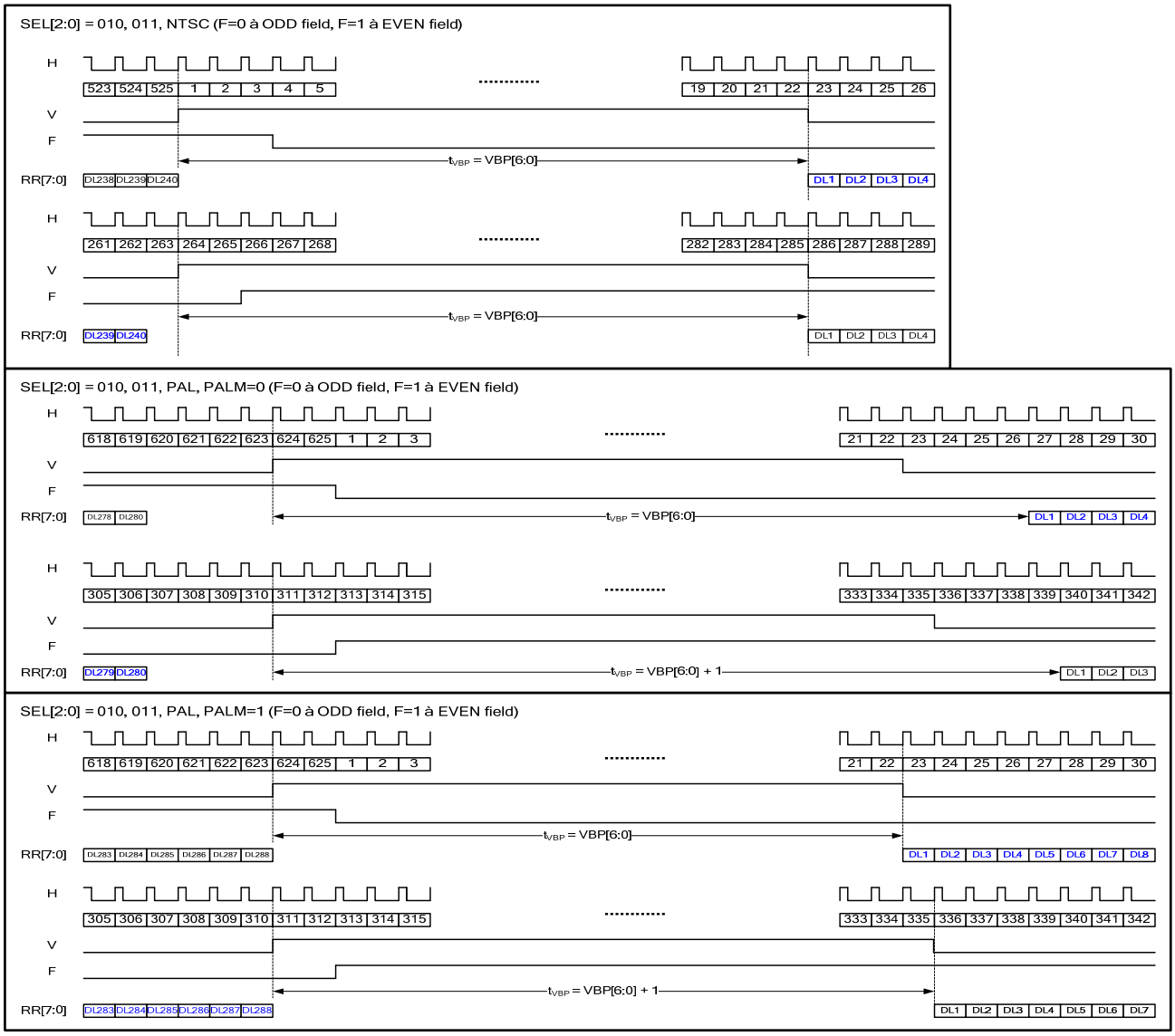

Figure2 CCIR656 Vertical Timing

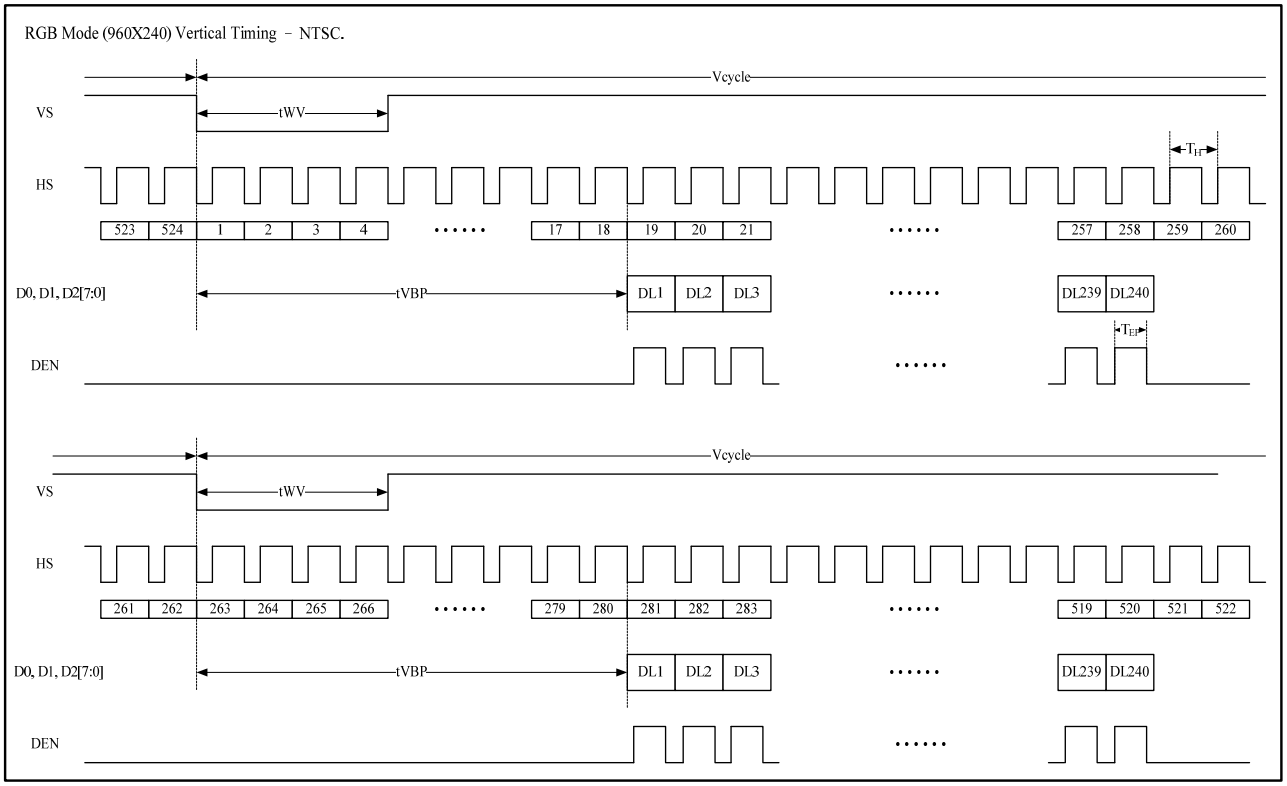

Figure 3 Digital RGB NTSC mode Vertical Data Format for 262T_H

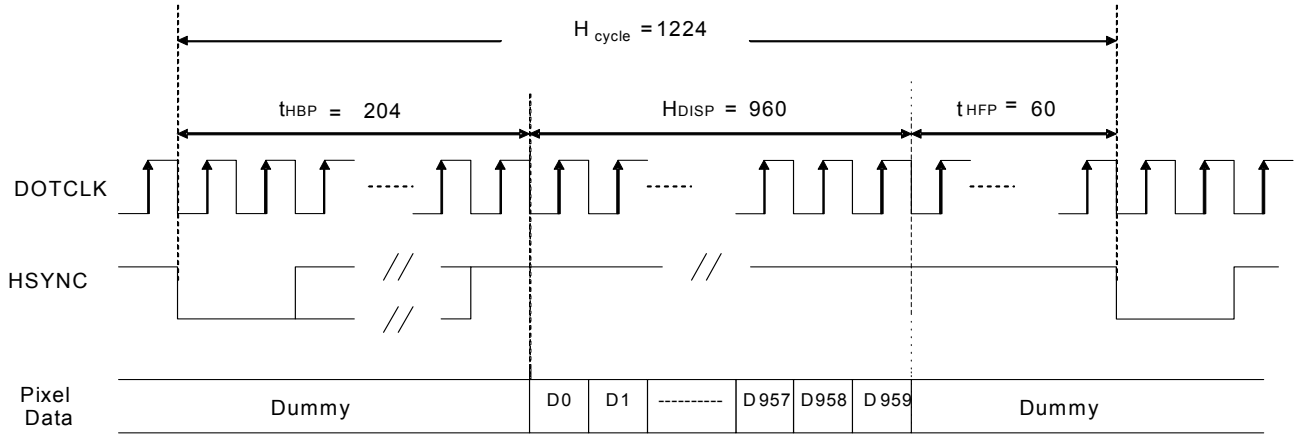

a) Horizontal Data Transaction Timing

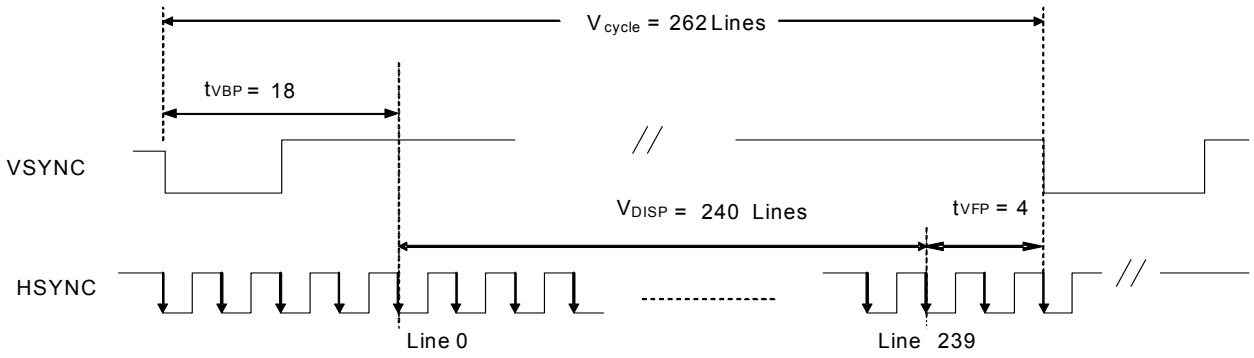

b) Vertical Data Transaction Timing

Figure 3 Data Transaction Timing in Serial RGB (8 bit) Interface (SYNC Mode)

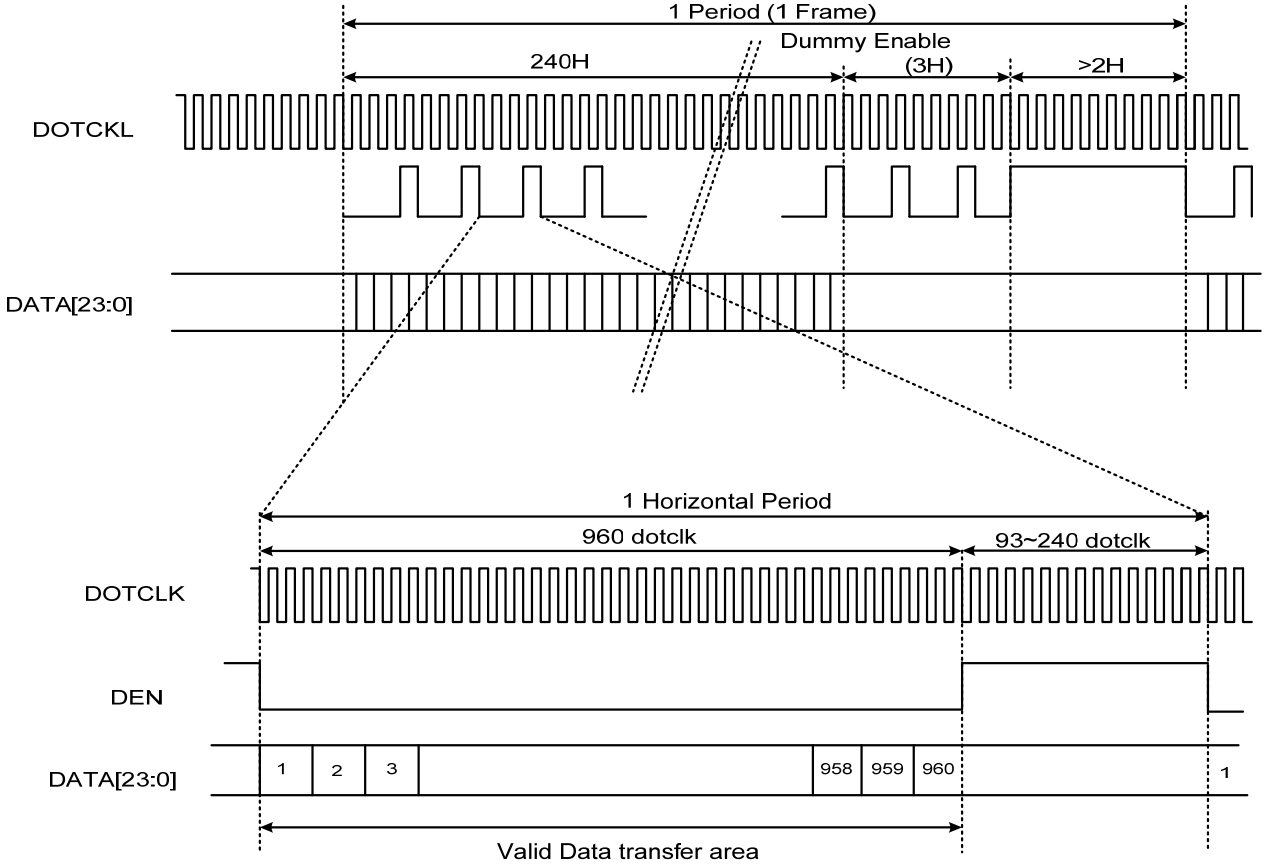

Figure3 Data Transaction Timing in Serial RGB (8 bit) Interface (DE Mode)

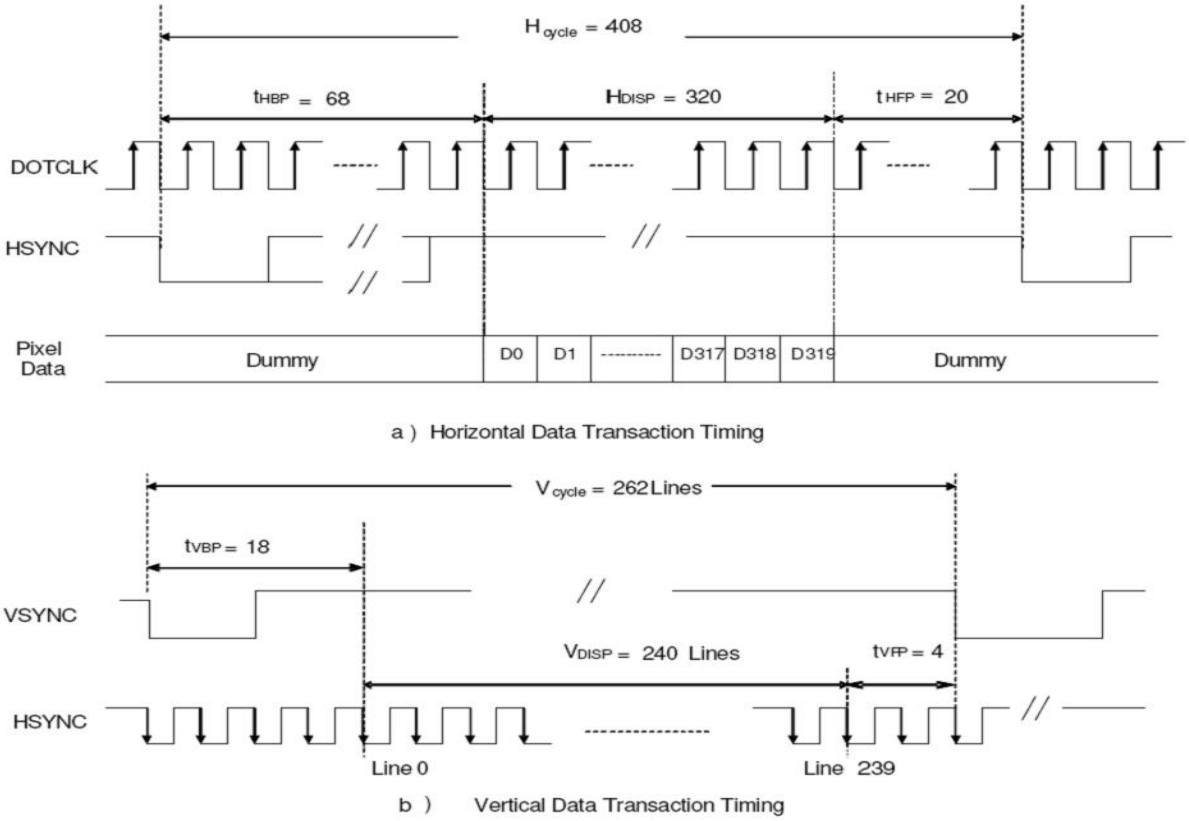

Figure3 Data Transaction Timing in Parallel RGB (24 bit) Interface (SYNC Mode)

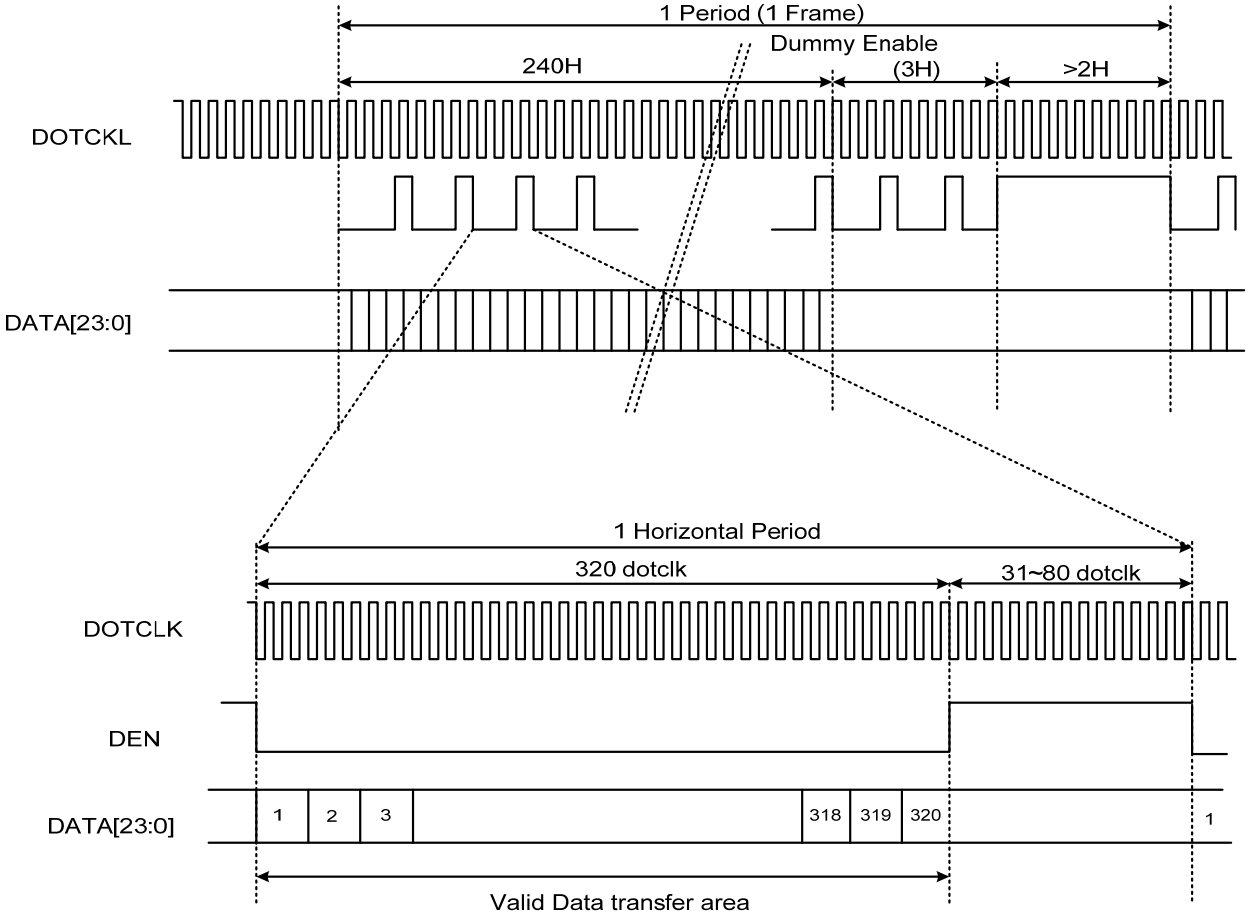

Figure4 Data Transaction Timing in Parallel RGB (24 bit) Interface (DE Mode)

7.1.1 Clock and Sync waveforms

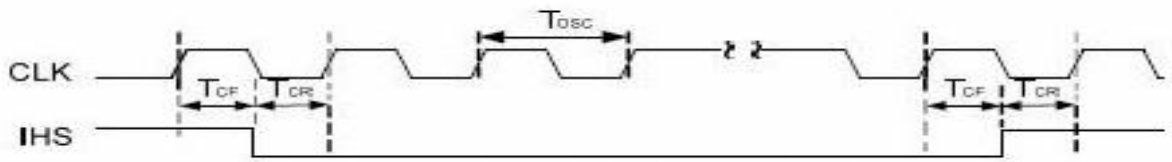

Figure6 CLK and IHS timing waveform

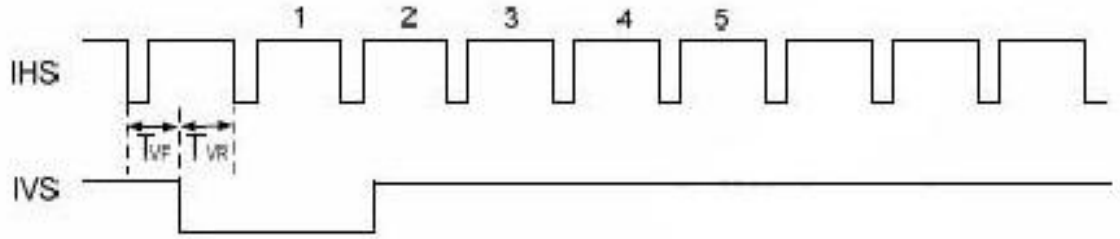

Figure7 IHS and IVS timing waveforms

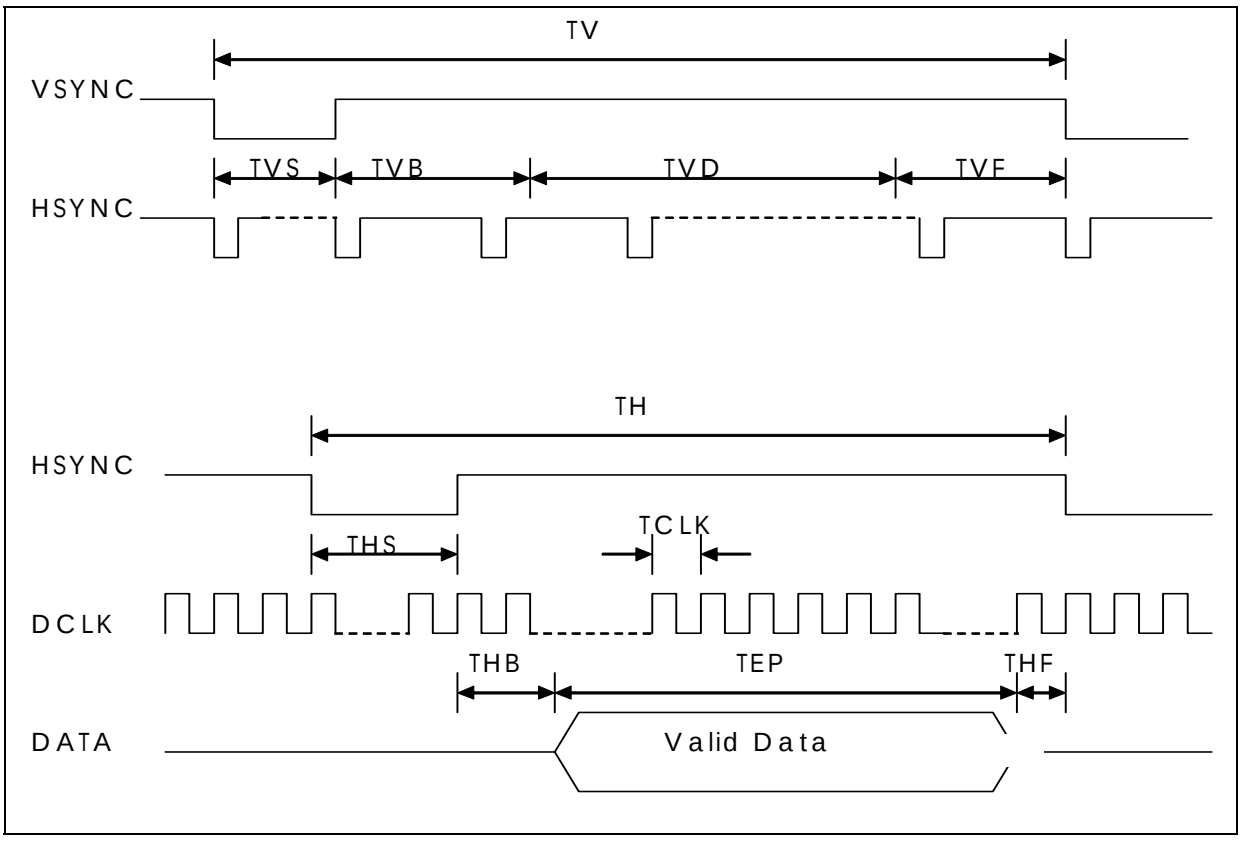

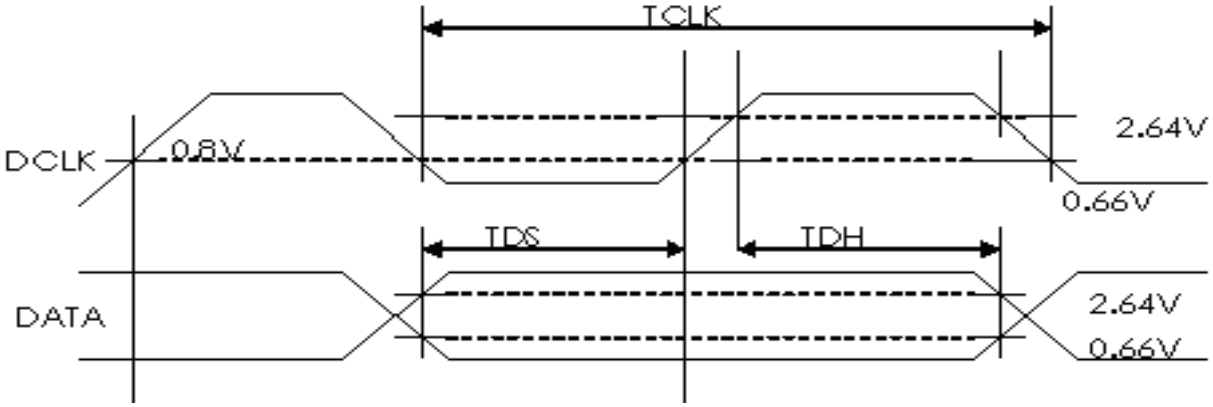

7.2 Reset Timing Chart

The RESET input must be held at least 1ms after power is stable

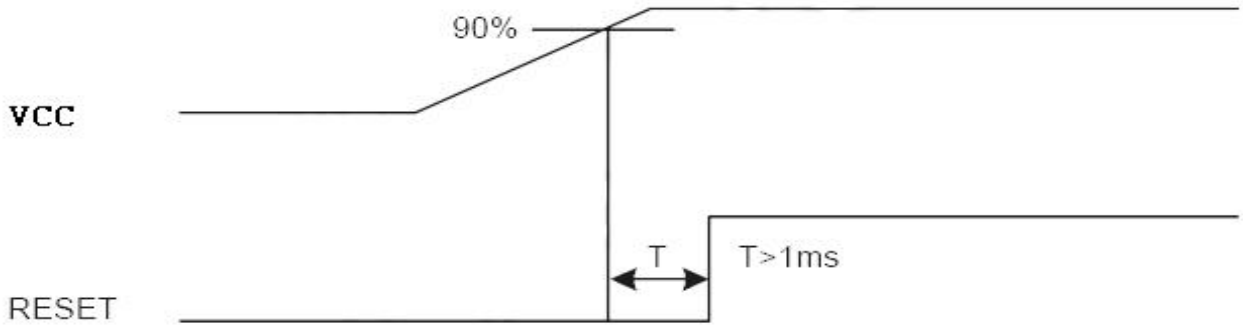

Reset timing

8. OPTICAL CHARATERISTIC

Ta=25±2℃, ILED=20mA

Item		Symbol	Condition	Min.	Typ.	Max.	Unit	Remark
Response time		Tr	θ=0°、Φ=0°	-	10		ms	Note 3,5
		Tf		-	15		ms	
Contrast ratio		CR	At optimized viewing angle	300	400	-	-	Note 4,5
Color Chromaticity	White	Wx	θ=0°、Φ=0	(0.26)	(0.31)	(0.36)		Note 2,6,7
		Wy		(0.28)	(0.33)	(0.38)		
Viewing angle	Hor.	ΘR	CR≧10	(50)	(60)		Deg.	Note 1
		ΘL		(50)	(60)			
	Ver.	ΦT		(40)	(50)			
		ΦB		(45)	(55)			
Brightness		-	-	200	250	-	cd/m^2	Center of display

Ta=25±2℃, I_L=20mA

Note 1: Definition of viewing angle range

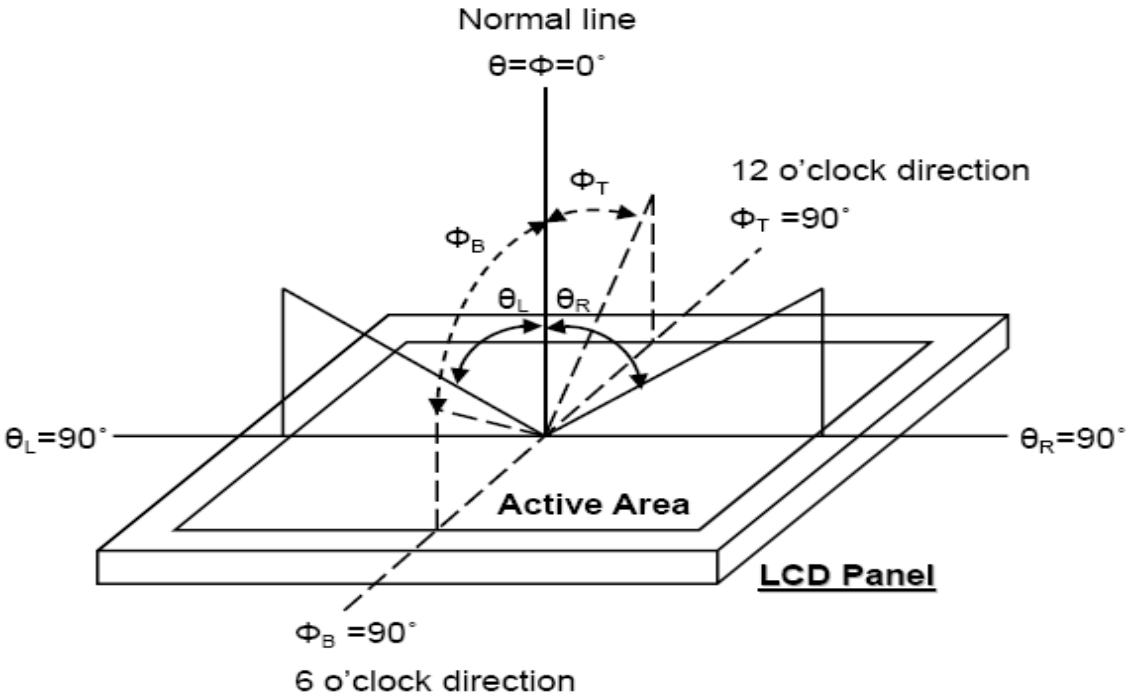

Fig. 8-1 Definition of viewing angle

Note 2: Test equipment setup:
After stabilizing and leaving the panel alone at a driven temperature for 10 minutes, the measurement should be executed. Measurement should be executed in a stable, windless, and dark room. Optical specifications are measured by Topcon BM-7 luminance meter 1.0° field of view at a distance of 50cm and normal direction.

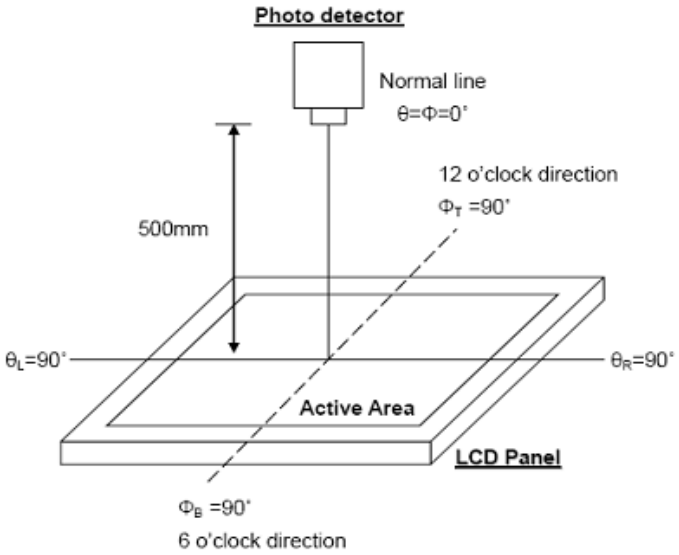

Fig. 8-2 Optical measurement system setup

Note 3: Definition of Response time:
The response time is defined as the LCD optical switching time interval between "White" state and"Black" state. Rise time, Tr, is the time between photo detector output intensity changed from 90% to 10% . And fall time, Tf, is the time between photo detector output intensity changed from10% to 90% .

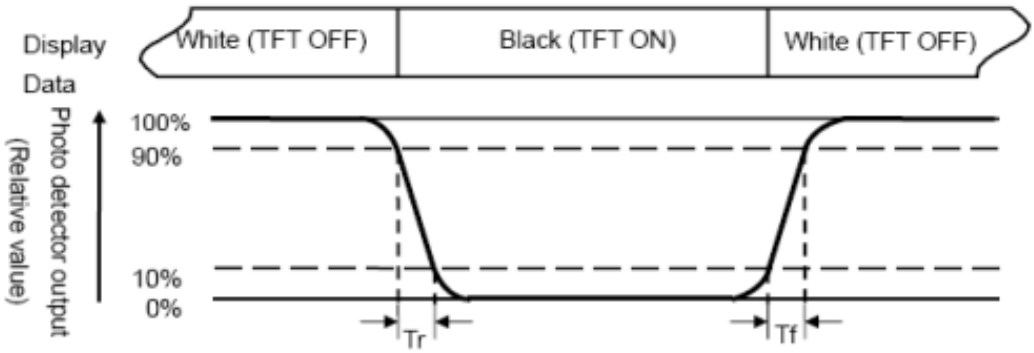

Fig. 3-3 Definition of response time

Note 4: Definition of contrast ratio:
The contrast ratio is defined as the following expression.

$$\text{Contrast ratio (CR)} = \frac{\text{Luminance measured when LCD on the "White" state}}{\text{Luminance measured when LCD on the "Black" state}}$$

Note 5: White Vi = V_{i50} ± 1.5V
Black Vi = V_{i50} ± 2.0V
"±" means that the analog input signal swings in phase with VCOM signal.
"±" means that the analog input signal swings out of phase with VCOM signal.
The 100% transmission is defined as the transmission of LCD panel when all the input terminals of module are electrically opened.

Note 6: Definition of color chromaticity (CIE 1931)
Color coordinates measured at the center point of LCD

Note 7: Measured at the center area of the panel when all the input terminals of LCD panel are electrically opened.

Note 8 : Uniformity (U) = $\frac{\text{Brightness (min)}}{\text{Brightness (max)}} \times 100\%$

9. TOUCH PANEL

9.1 Block diagram

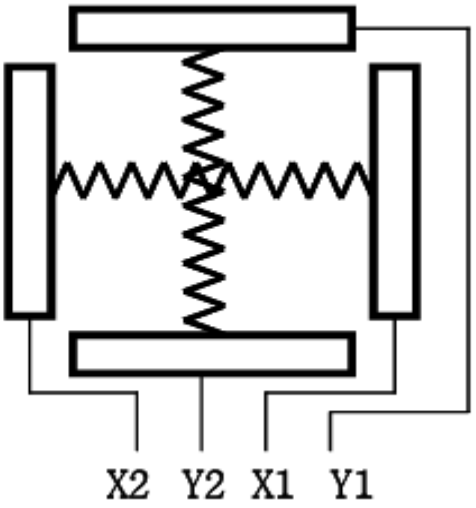

Top View

X : Upper electrode
Y : Lower electrode

9.2 Absolute maximun ratings

Item	Symbol	Condictions	Specifications	Unit
Supply voltage	-	-	DC 5.0	V

9.3 Electrical characteristics

Item	Symbol	Condictions	Min	Typ	Max	Unit	Note
Resistance between terminal	RX	-	200		900	ohm	Note1
	RY	-	200		900	ohm	Note1
Insulation resistance	RINS	DC 25V	20	-	-	M ohm	Note1
Linearity (Note2,3)	-	-			1.5	%	Note1
Chattering	-	-			10max	ms	Note1

Note1.This specifications applied to only touch panel and calibration is more than 3 points.

Note 2.Test condiction

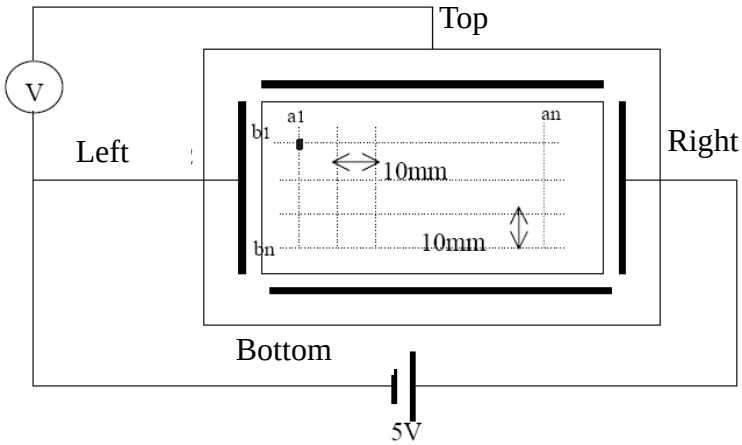

(a) X- axis linearity method VY2-VY1=5V, VOUT=VX2
(b) Y- axis linearity method Vx1-Vx2=5V, VOUT=VY1

Note 3.Calcutioon
Define linearity Xi as:
Linearity Xi= IΔE maxI /(Van-Val)
Linearity X=Max(Linearity x1,…..Linearity xn)

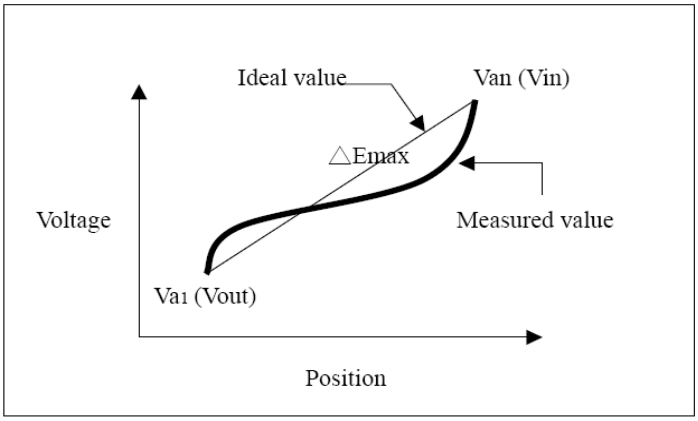

9.4 Mechanical & Reliability Characteristics

Item	Min.	Typ.	Max.	Unit	Note
Activation force	-	-	100	g	(1)
Durability-surface scratching	Write 100,000	-	-	characters	(2)
Durability-surface pitting	1,000,000	-	-	touches	(3)
Surface hardness	3	-	-	H	JIS K5400, ASTM D3363

Note：
1. Stylus pen Input : R0.8mm polyacetal pen or Finger

2. Measurement for Surface area
-100,000 times or over
-Writing with R0.8mm plastic stylus pen ; writing force 150g in active area.
-Speed is 60mm/sec(each direction inside Active area 3 mm).

3. 1,000,000 times or over (No damage on film surface)
-Pen : point with R0.8mm Silicon rubber
-Load : 250 g
-frequency :240 times/min
-Measurement position : 1 point of touch penal active area
Repeated ; over 1,000,000 times

10. INTERFACE

10.1. LCM PIN Definition

Pin	Symbol	I/O	Function	Remark
1	VBL-	I	Backlight LED Ground	
2	VBL-	I	Backlight LED Ground	
3	VBL+	I	Backlight LED Power	
4	VBL+	I	Backlight LED Power	
5	Y1	I	Top electrode ,	
6	X1	I	Right electrode	
7	NC		Not Use	
8	/RESET	-	Hardware Reset	
9	SPENA	I	SPI Interface Data Enable Signal	Note 3
10	SPCLK	I	SPI Interface Data Clock	Note 3
11	SPDAT	I	SPI Interface Data	Note 3
12	B0	I	Blue Data Bit 0	
13	B1	I	Blue Data Bit 1	
14	B2	I	Blue Data Bit 2	
15	B3	I	Blue Data Bit 3	
16	B4	I	Blue Data Bit 4	
17	B5	I	Blue Data Bit 5	
18	B6	I	Blue Data Bit 6	
19	B7	I	Blue Data Bit 7	
20	G0	I	Green Data Bit0	
21	G1	I	Green Data Bit1	
22	G2	I	Green Data Bit2	
23	G3	I	Green Data Bit3	
24	G4	I	Green Data Bit4	
25	G5	I	Green Data Bit5	
26	G6	I	Green Data Bit6	
27	G7	I	Green Data Bit7	
28	R0	I	Red Data Bit0 /DX0	Note 4
29	R1	I	Red Data Bit1 /DX1	Note 4
30	R2	I	Red Data Bit2 /DX2	Note 4
31	R3	I	Red Data Bit3 /DX3	Note 4
32	R4	I	Red Data Bit4 /DX4	Note 4

33	R5	I	Red Data Bit5 /DX5	Note 4
34	R6	I	Red Data Bit6 /DX6	Note 4
35	R7	I	Red Data Bit7 /DX7	Note 4
36	HSYNC	I	Horizontal Sync Input	
37	VSYNC	I	Vertical Sync Input	
38	DCLK	I	Dot Data Clock	
39	NC		Not Use	
40	NC		Not Use	
41	Vcc	I	Digital Power	
42	Vcc	I	Digital Power	
43	Y2	I	Bottom electrode	
44	X2	I	Left electrode	
45	NC	-	Internal test use	
46	NC	-	Not Use	
47	NC	-	Internal test use	
48	SEL2	I	Control the input data format /floating	Note 1
49	SEL1	I	Control the input data format	Note 1,5
50	SEL0	I	Control the input data format	Note 1,5
51	NC		Not Use	
52	DE	I	Data Enable Input	Note 2
53	GND	I	Ground	
54	GND	I	Ground	

Note:

1. The mode control (SEL2) not use, it can't control CCIR601 interface. If not use CCIR601, it can floating.
2. For digital RGB input data format, both SYNC mode and DE+SYNC mode are supported. If DE signal is fixed now, SYNC mode is used. Otherwise, DE+SYNC mode is used. Suggest used SYNC mode. Suggest the DE signal usually pull low.
3. Usually pull high.
4. IF select serial RGB or CCIR601/656 input mode is selected, only DX0-DX7 used, and the other short to GND, only selected serial RGB、CCIR601/656 interface, DX BUS will enable. Digital input mode DX0 is LSB and DX7 is MSB.
5. Control the input data format

SEL 2-0: Define the input interface mode.

SEL2	SEL1	SEL0	Format	Operating Frequency
0	0	0	Parallel-RGB data format (only support stripe type color filter)	6.5MHz
0	0	1	Serial-RGB data format	19.5MHz
0	1	0	CCIR 656 data format (640RGB)	24.54MHz
0	1	1	CCIR 656 data format (720RGB)	27MHz
1	0	0	YUV mode A data format (Cr-Y-Cb-Y)	24.54MHz
1	0	1	YUV mode A data format (Cr-Y-Cb-Y)	27MHz
1	1	0	YUV mode B data format (Cb-Y-Cr-Y)	27MHz
1	1	1	YUV mode B data format (Cb-Y-Cr-Y)	24.54MHz

Input format	DOTCLK Freq (MHz)	Display Data	Active Area (DOTCLK)
YUV mode	24.54	640	1280
	27	720	1440

Mode	D[23:16]	D[15:8]	D[7:0]	IHS	IVS	DEN
ITU-R BT 656	D[23:16]	GND	GND	NC	NC	NC
ITU-R BT 601	D[23:16]	GND	GND	IHS	IVS	NC
8 bit RGB	D[23:16]	GND	GND	IHS	IVS	NC for HV Mode DEN for DEN Mode
24 bit RGB	R[7:0]	G[7:0]	B[7:0]	IHS	IVS	NC for HV Mode DEN for DEN Mode

10.2 SPI timing Characteristics

PARAMETER	Symbol	Min.	Typ.	Max.	Unit
SPCK period	T_{CK}	60	-	-	ns
SPCK high width	T_{CKH}	30	-	-	ns
SPCK low width	T_{CKL}	30	-	-	ns
Data setup time	T_{SU1}	12	-	-	ns
Data hold time	T_{HD1}	12	-	-	ns
SPENA to SPCK setup time	T_{CS}	20	-	-	ns
SPENA to SPDA hold time	T_{CE}	20	-	-	ns
SPENA high pulse width	T_{CO}	50	-	-	ns
SPDA output latency	T_{CS}	-	1/2	-	T_{CK}

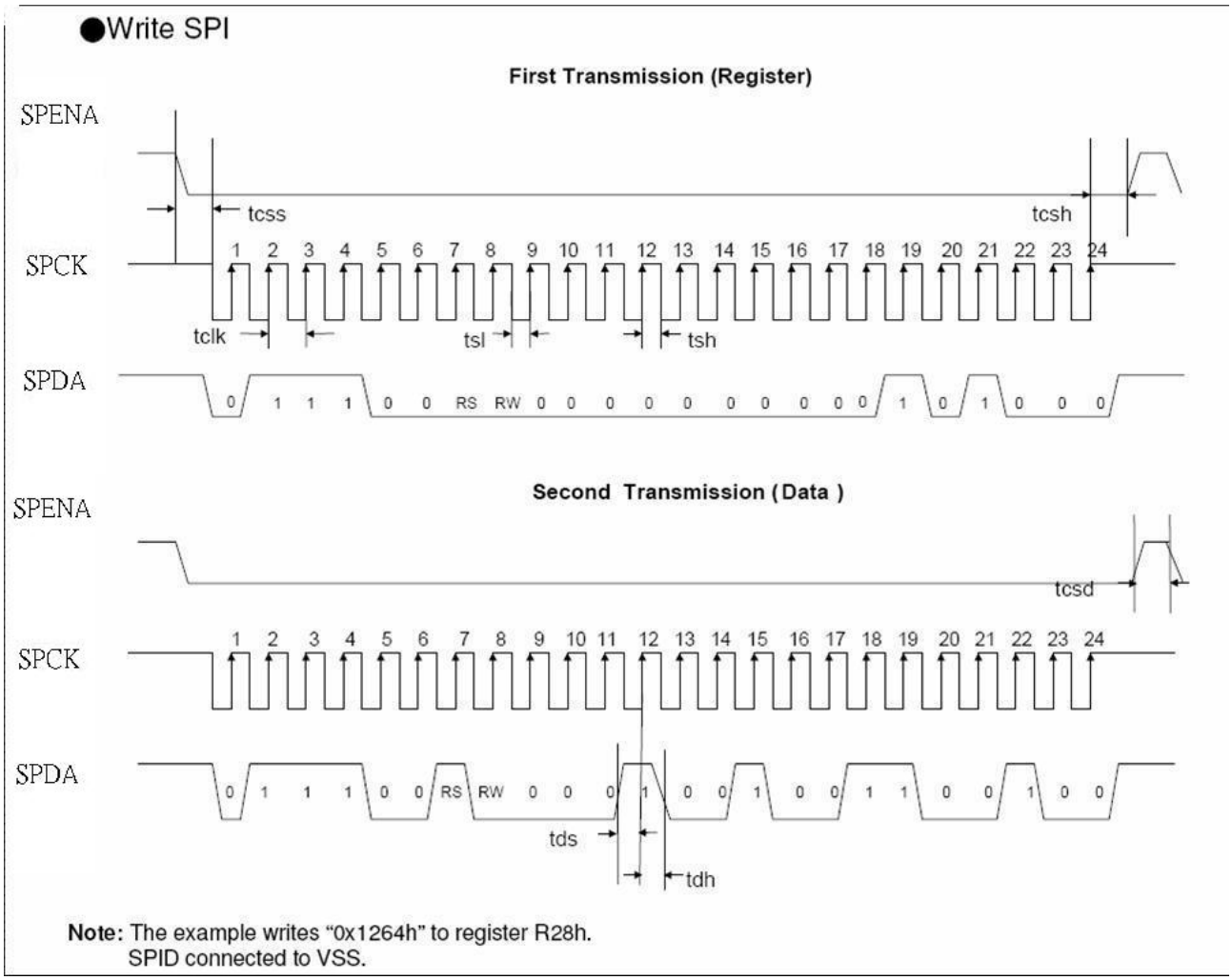

Figure8 SPI read、write timing

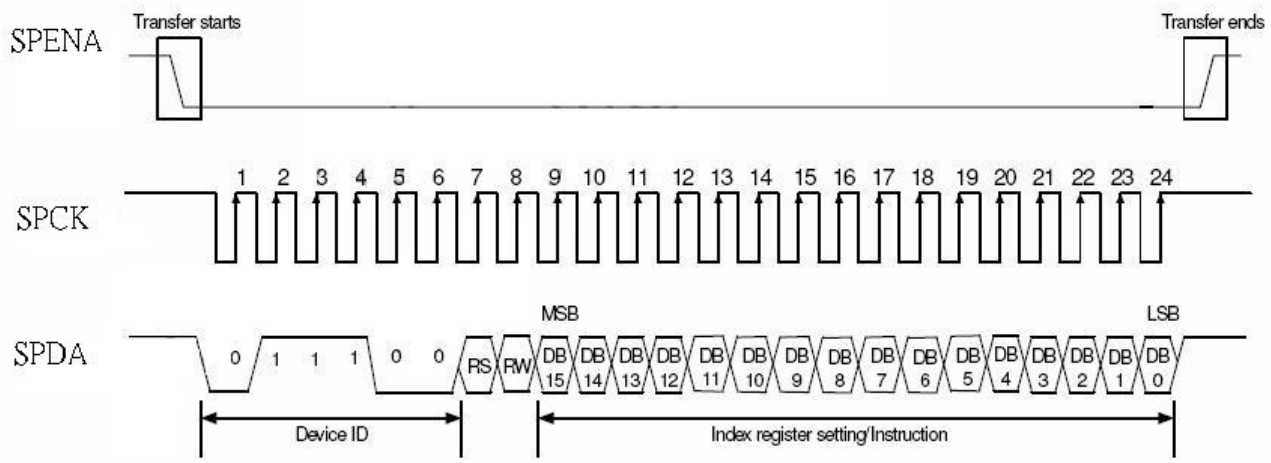

Figure9 SPI timing

10.3 Basic Display Color and Gray Scale

Color		Input Color Data																							
		Red								Green								Blue							
		MSB							LSB	MSB							LSB	MSB							LSB
		R7	R6	R5	R4	R3	R2	R1	R0	G7	G6	G5	G4	G3	G2	G1	G0	B7	B6	B5	B4	B3	B2	B1	B0
Basic Colors	Black	0	0	0	0	0	0	0	0	0	0	0	0	0	0	0	0	0	0	0	0	0	0	0	0
	Red(255)	1	1	1	1	1	1	1	1	0	0	0	0	0	0	0	0	0	0	0	0	0	0	0	0
	Green(255)	0	0	0	0	0	0	0	0	1	1	1	1	1	1	1	1	0	0	0	0	0	0	0	0
	Blue(255)	0	0	0	0	0	0	0	0	0	0	0	0	0	0	0	0	1	1	1	1	1	1	1	1
	Cyan	0	0	0	0	0	0	0	0	1	1	1	1	1	1	1	1	1	1	1	1	1	1	1	1
	Magenta	1	1	1	1	1	1	1	1	0	0	0	0	0	0	0	0	1	1	1	1	1	1	1	1
	Yellow	1	1	1	1	1	1	1	1	1	1	1	1	1	1	1	1	0	0	0	0	0	0	0	0
	White	1	1	1	1	1	1	1	1	1	1	1	1	1	1	1	1	1	1	1	1	1	1	1	1
Red	Red(0) Dark	0	0	0	0	0	0	0	0	0	0	0	0	0	0	0	0	0	0	0	0	0	0	0	0
	Red(1)	0	0	0	0	0	0	0	1	0	0	0	0	0	0	0	0	0	0	0	0	0	0	0	0
	Red(2)	0	0	0	0	0	0	1	0	0	0	0	0	0	0	0	0	0	0	0	0	0	0	0	0
	:	:	:	:	:	:	:	:	:	:	:	:	:	:	:	:	:	:	:	:	:	:	:	:	:
	Red(253)	1	1	1	1	1	1	0	1	0	0	0	0	0	0	0	0	0	0	0	0	0	0	0	0
	Red(254)	1	1	1	1	1	1	1	0	0	0	0	0	0	0	0	0	0	0	0	0	0	0	0	0
	Red(255) Bright	1	1	1	1	1	1	1	1	0	0	0	0	0	0	0	0	0	0	0	0	0	0	0	0
Green	Green(0) Dark	0	0	0	0	0	0	0	0	0	0	0	0	0	0	0	0	0	0	0	0	0	0	0	0
	Green(1)	0	0	0	0	0	0	0	0	0	0	0	0	0	0	0	1	0	0	0	0	0	0	0	0
	Green(2)	0	0	0	0	0	0	0	0	0	0	0	0	0	0	1	0	0	0	0	0	0	0	0	0
	:	:	:	:	:	:	:	:	:	:	:	:	:	:	:	:	:	:	:	:	:	:	:	:	:
	Green(253)	0	0	0	0	0	0	0	0	1	1	1	1	1	1	0	1	0	0	0	0	0	0	0	0
	Green(254)	0	0	0	0	0	0	0	0	1	1	1	1	1	1	1	0	0	0	0	0	0	0	0	0
	Green(255)Bright	0	0	0	0	0	0	0	0	1	1	1	1	1	1	1	1	0	0	0	0	0	0	0	0
Blue	Blue(0) Dark	0	0	0	0	0	0	0	0	0	0	0	0	0	0	0	0	0	0	0	0	0	0	0	0
	Blue(1)	0	0	0	0	0	0	0	0	0	0	0	0	0	0	0	0	0	0	0	0	0	0	0	1
	Blue(2)	0	0	0	0	0	0	0	0	0	0	0	0	0	0	0	0	0	0	0	0	0	0	1	0
	:	:	:	:	:	:	:	:	:	:	:	:	:	:	:	:	:	:	:	:	:	:	:	:	:
	Blue(253)	0	0	0	0	0	0	0	0	0	0	0	0	0	0	0	0	1	1	1	1	1	1	0	1
	Blue(254)	0	0	0	0	0	0	0	0	0	0	0	0	0	0	0	0	1		1	1	1	1	1	0
	Blue(255) Bright	0	0	0	0	0	0	0	0	0	0	0	0	0	0	0	0	1		1	1	1	1	1	1

11. BLOCK DIAGRAM

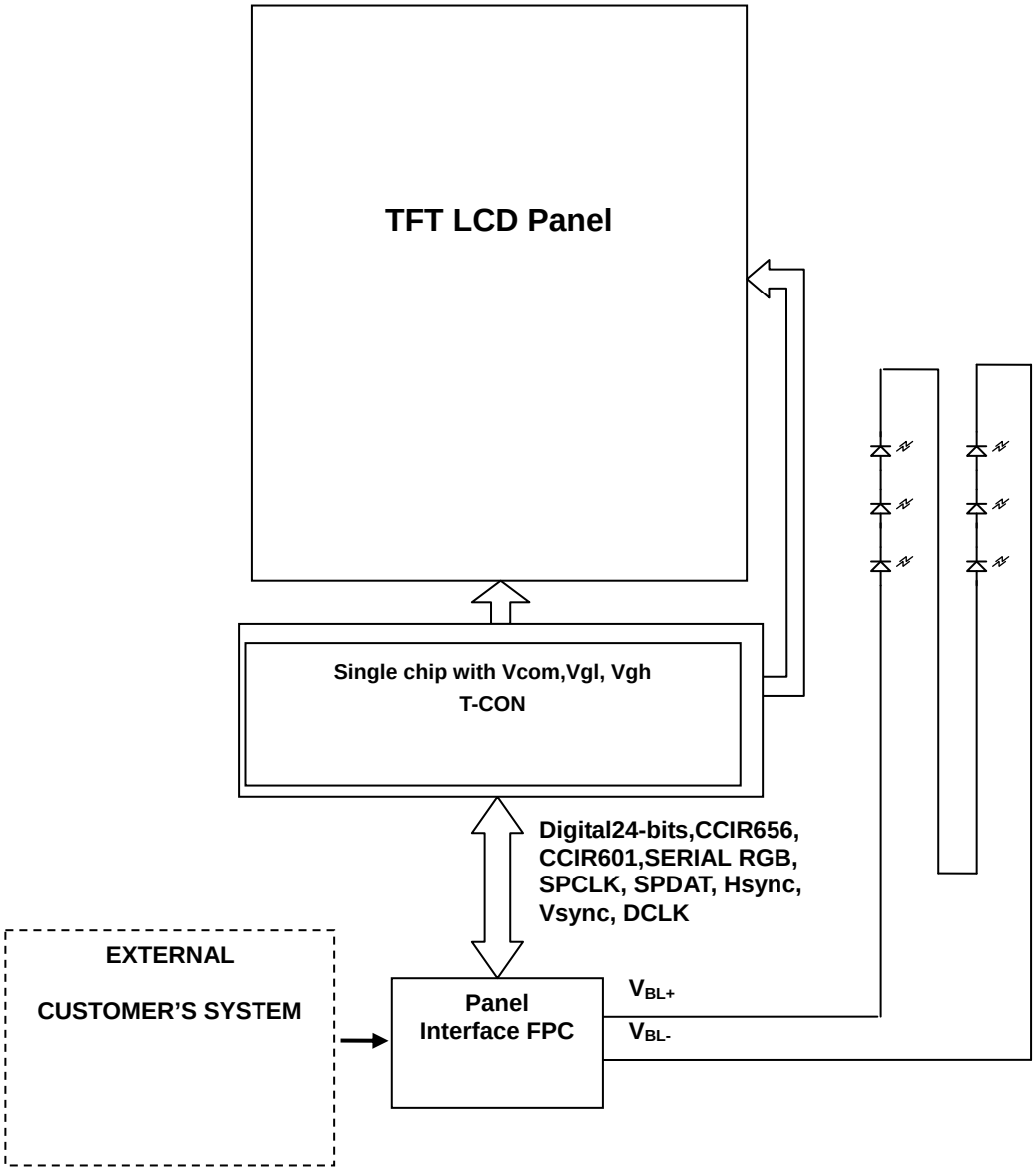

12. QUALITY ASSURANCE

No.	Test Items	Test Condition	REMARK
1	High Temperature Storage Test	Ta=80℃ Dry 240h	
2	Low Temperature Storage Test	Ta=-30℃ Dry 240h	
3	High Temperature Operation Test	Ta=70℃ Dry 240h	
4	Low Temperature Operation Test	Ta=-20℃ Dry 240h	
5	High Temperature and High Humidity Operation Test	Ta=60℃ 90%RH 240h	
6	Electro Static Discharge Test	Panel surface / top case. Contact / Air：±6KV / ±8KV，150pF，330Ω	Non-operating
7	Shock Test (non-operating)	Shock Level : 100G Waveform : Half Sinusoidal Wave Shock Time : 6ms Number of Shocks : 3 times for each ±X, ±Y, ±Z direction	
8	Vibration Test (non-operating)	Frequency range: 10Hz ~ 550Hz Stoke：1.3mm Sweep : 1.5G, 33.3~400Hz Vibration : Sinusoidal Wave, 1Hrs for X,YZ direction.	
9	Thermal Shock Test	-20℃(0.5h) ~ 70℃(0.5h) / 100 cycles	

***** Ta= Ambient Temperature

Note:

1. The test samples have recovery time for 2 hours at room temperature before the function check. In the standard conditions, there is no display function NG issue occurred.
2. All the cosmetic specifications are judged before the reliability stress.

13. OUTLINE DRAWING

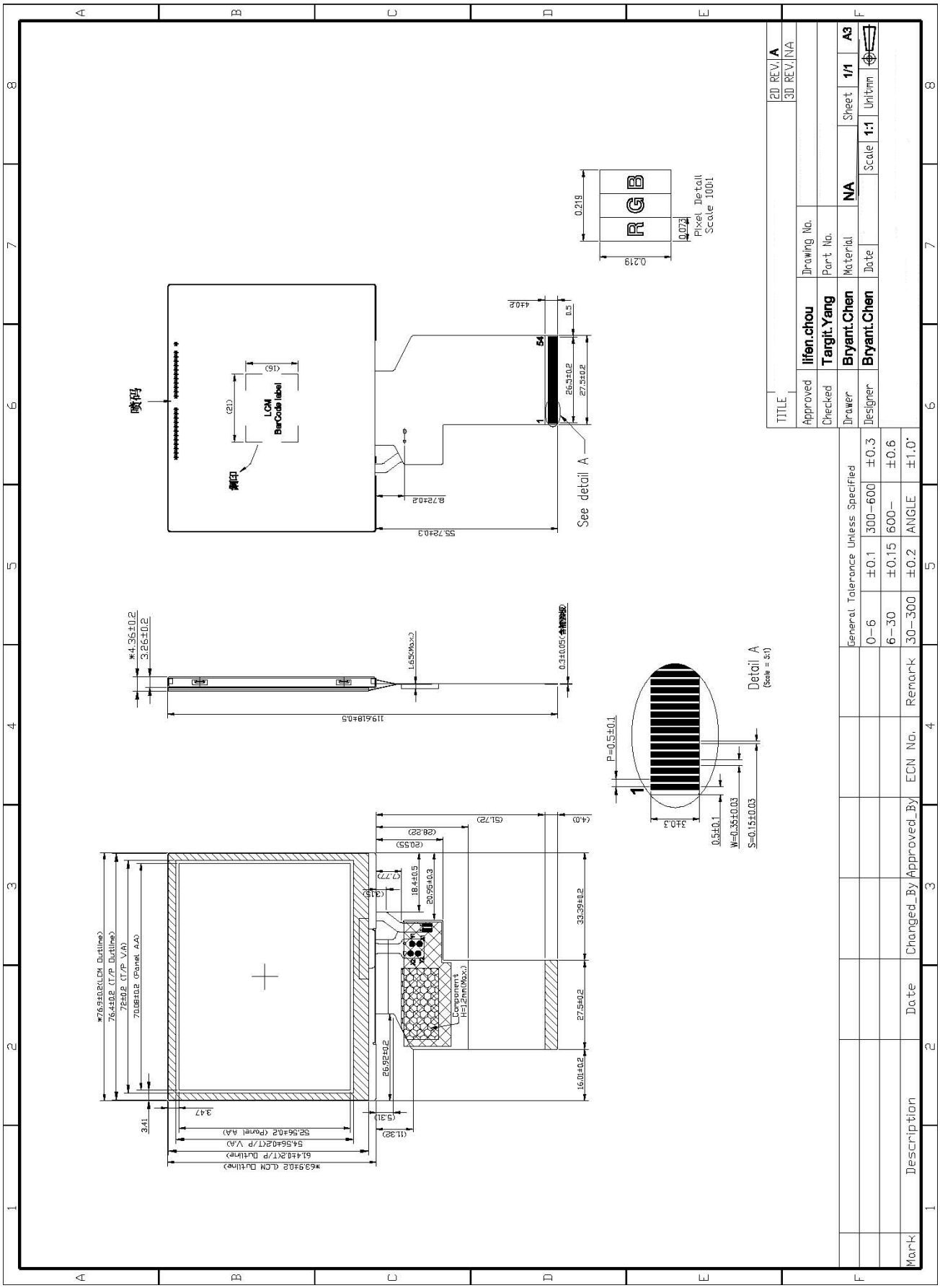

14. PACKAGE INFORMATION

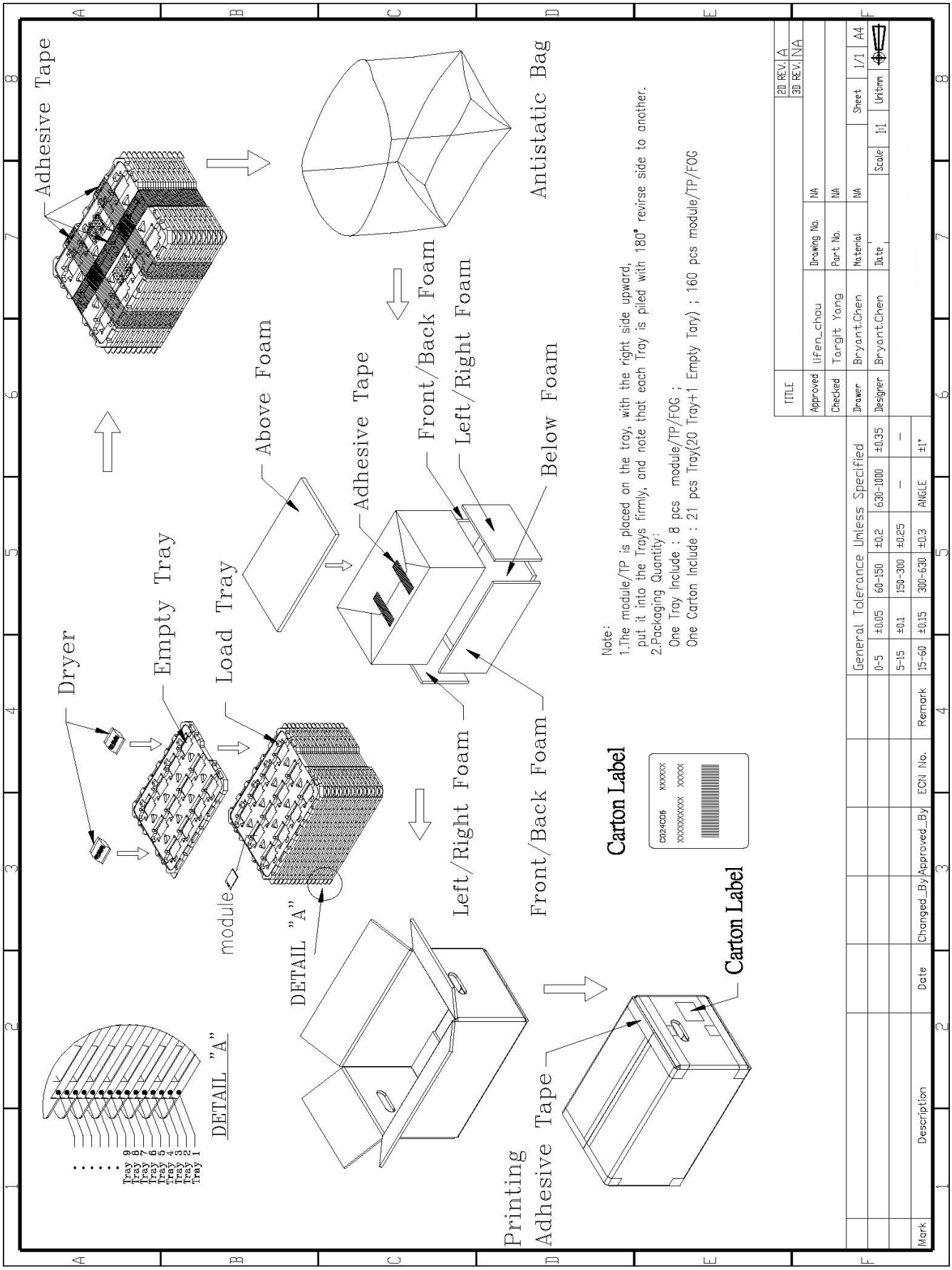

15. RECAUTIONS

Please pay attention to the following when you use this TFT LCD module.

15.1 MOUNTING PRECAUTIONS

(1) You must mount a module using arranged in four corners or four sides.
(2) You should consider the mounting structure so that uneven force (ex. Twisted stress) is not applied to the module.
And the case on which a module is mounted should have sufficient strength so that external force is not transmitted directly to the module.
(3) Please attach a transparent protective plate to the surface in order to protect the polarizer.
Transparent protective plate should have sufficient strength in order to the resist external force.
(4) You should adopt radiation structure to satisfy the temperature specification.
(5) Acetic acid type and chlorine type materials for the cover case are not describe because the former generates corrosive gas of attacking the polarizer at high temperature and the latter causes circuit break by electro-chemical reaction.
(6) Do not touch, push or rub the exposed polarizers with glass, tweezers or anything harder than HB pencil lead. And please do not rub with dust clothes with chemical treatment.
Do not touch the surface of polarizer for bare hand or greasy cloth. (Some cosmetics are determined to the polarizer)
(7) When the surface becomes dusty, please wipe gently with adsorbent cotton or other soft materials like chamois soaks with petroleum benzene. Normal-hexane is recommended for cleaning the adhesives used to attach front / rear polarizers. Do not use acetone, toluene and alcohol because they cause chemical damage to the polarizer.
(8) Wipe off saliva or water drops as soon as possible. Their long time contact with polarizer causes deformations and color fading.
(9) Do not open the case because inside circuits do not have sufficient strength.

15.2 OPERATING PRECAUTIONS

(1) The spike noise causes the mis-operation of circuits. It should be lower than following voltage：V=±200mV(Over and under shoot voltage)
(2) Response time depends on the temperature. (In lower temperature, it becomes longer.)
(3) Brightness depends on the temperature. (In lower temperature, it becomes lower)
And in lower temperature, response time (required time that brightness is stable after turned on) becomes longer.
(4) Be careful for condensation at sudden temperature change. Condensation makes damage to polarizer or electrical contacted parts. And after fading condensation, smear or spot will occur.
(5) When fixed patterns are displayed for a long time, remnant image is likely to occur.
(6) Module has high frequency circuits. Sufficient suppression to the electromagnetic interference shall be done by system manufacturers. Grounding and shielding methods may be important to minimize the interference.

15.3 ELECTROSTATIC DISCHARGE CONTROL

Since a module is composed of electronic circuits, it is not strong to electrostatic discharge. Make certain that treatment persons are connected to ground through wristband etc. And don’t touch interface pin directly.

15.4 PRECAUTIONS FOR STRONG LIGHT EXPOSURE

Strong light exposure causes degradation of polarizer and color filter.

15.5 STORAGE

When storing modules as spares for a long time, the following precautions are necessary.

(1) Store them in a dark place. Do not expose the module to sunlight or fluorescent light. Keep the temperature between 5℃ and 35℃ at normal humidity.

(2) The polarizer surface should not come in contact with any other object. It is recommended that they be stored in the container in which they were shipped.

15.6 HANDLING PRECAUTIONS FOR PROTECTION FILM

(1) When the protection film is peeled off, static electricity is generated between the film and polarizer. This should be peeled off slowly and carefully by people who are electrically grounded and with well ion-blown equipment or in such a condition, etc.

(2) The protection film is attached to the polarizer with a small amount of glue. Is apt to remain on the polarizer. Please carefully peel off the protection film without rubbing it against the polarizer.

(3) When the module with protection film attached is stored for a long time, sometimes there remains a very small amount of glue still on the polarizer after the protection film is peeled off.

(4) You can remove the glue easily. When the glue remains on the polarizer surface or its vestige is recognized, please wipe them off with absorbent cotton waste or other soft material like chamois soaked with normal-hexane.

15.7 Cautions for installing and assembling
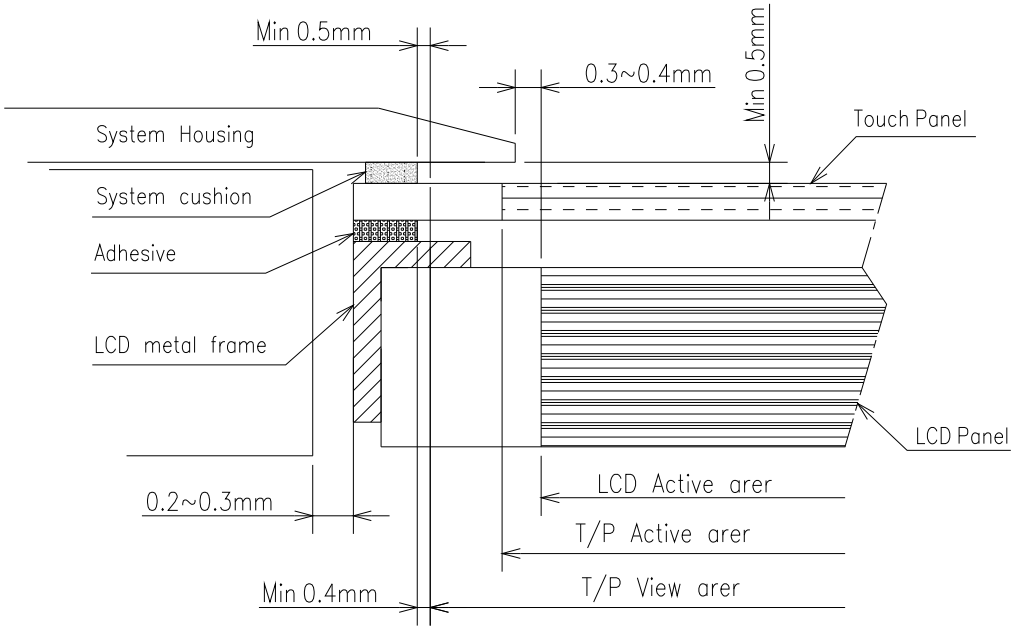
Bezel edge must be positioned in the area between the Active area and View area. The bezel may press the touch screen and cause activation if the edge touches the active area. A gap of approximately 0.5mm is needed between the bezel and the top electrode. It may cause unexpected activation if the gap is too narrow. There is a tolerance of 0.2 to 0.3mm for the outside dimensions of the touch panel and tail. A gap must be made to absorb the tolerance in the case and connector.